Fall 2025 EPT RECRUIT Project Review Sheet
(Thermal Sensor)

(Aryan Pillai) (CPE)

(Project Type: Digital Board)

Project Introduction

My DAP project was to design a very small and compact, self-contained thermal sensing module incorporating the Melexis MLX90640 infrared array, intended to be deployed in sets of four near the vehicle's bell cranks, each aimed toward a tire to measure surface temperature distributions in real time, and transmit the data onto the vehicle's existing CAN bus to the data acquisition (DAQ) module. The final PCB measures 1414 mil × 1026 mil, or approximately 1.4 × 1 inches, allowing it to be light and small enough not to weigh down the car significantly.

To enable onboard processing and integration with the EV's DAQ, I selected an STM32 microcontroller, which is familiar with the team. This device contains an I2C peripheral capable of interfacing with the IR sensor, a hardware CAN controller with low active-mode power consumption, and a familiar firmware. I used the MCU's accurate internal High-Speed Internal (HSI) oscillator to run the system without an external crystal, reducing component count and potential failure points. I also implemented a 10-pin Samtec SWD debugging header wired on the bottom layer, providing direct access to programming. Under typical operating conditions, the MCU draws approximately 12 mA.

The power supply was designed to satisfy automotive reliability requirements while maintaining simplicity and low noise. To start with the power in, I selected a Micro-Fit 3.0 right-angle 4-circuit connector providing a vibration-resistant connection. Immediately following the connector, the 12 V rail passes through a 250-mA fuse, serving as the primary disconnect for catastrophic faults. Directly after the fuse, I placed a Bidirectional TVS diode to handle high-voltage surges. Finally, the circuit enters a reverse polarity protection circuit using a P-channel MOSFET. I chose a PFET over a regular series diode because it offers a much lower resistance, which eliminates the significant voltage drop and heat generation associated with diodes. To ensure the PFET survives the environment, I added a 12V Zener diode between the Gate and Source, which clamps the gate voltage to a safe level, protecting the PFET oxide layer from rupturing during high-voltage transients. Additionally, I included a 100 kilo-ohm resistor connecting the Gate to Ground to control the switching logic. Under normal conditions, the resistor pulls the Gate low while the Source rises to 12 volts, creating the strong negative Gate-to-Source voltage (V_{GS}) required to turn the PFET fully on. If the polarity is reversed, the Gate voltage no longer drops below the Source, forcing the PFET to remain OFF and effectively blocking the reverse current. The circuit is now the protected 12 V rail.

After the protection stage, the system is regulated down to 3.3 V using a single NCP716 LDO. To ensure thermal stability, I calculated the total system load by summing the typical currents of all active components: the MCU (12 mA), the Thermal Sensor (23 mA), the CAN Transceiver (10 mA), the Power LED (1.2 mA), and the I2C pull-up resistors (3.3 mA), resulting in a Total Typical Current of approximately 50 mA. Calculating the thermal load at this operating point revealed that the voltage drop from 14.4V to 3.3V would require dissipating over 0.55 W of power, which is a significant load for a small LDO package.

To prevent the LDO from handling this entire heat load, I inserted a 47-ohm, 0.5W automotive-grade thick-film resistor in series with the input. This resistor acts as a thermal offload by creating a voltage drop of roughly 2.35 V, which dissipates about 0.12 W of heat externally. This lowers the input voltage seen by the LDO, reducing its thermal burden to approximately 0.44 W and keeping it within its safe operating area. Additionally, the resistor was sized to 0.5W so it can survive a worst-case peak current of 100 mA, where it would need to dissipate 0.47 W safely. I also included a dedicated Power LED on the 3.3V rail to provide immediate visual confirmation of regulator health during testing.

For the sensors, the Melexis MLX90640 is driven via I2C. To support the speed required for high frame rates, I selected 1 kilo-ohm pull-up resistors based on the manufacturer. The sensor module typically draws 23 mA during continuous operation. For communication, my design utilizes the TCAN332 CAN transceiver, chosen for its integrated ESD and EMI protection. The CAN differential pair is routed with rounded accordion length tuning make sure the differential pair has similar propagation delay. To support flexible integration within the vehicle's CAN topology, I added a termination-enable dip switch; if any of the four nodes is the terminator of the CAN bus, the switch can be flipped to administer a 120-ohm resistor. This transceiver typically draws an average of 10 mA during normal bus communication.

To facilitate debugging in a testing environment, I integrated test points, including standard hook-style loop terminals for Ground, 3.3V, and 12V rails, CAN_H, CAN_L, NRST, SDA, SCL as well as a specific LDO Input test point that allows for real-time current sensing by measuring the voltage drop across the series resistor.

Collectively, these decisions resulted in a low-noise, electrically resilient thermal sensing module capable of providing reliable, high-resolution tire-temperature data during operation on track.

3D View

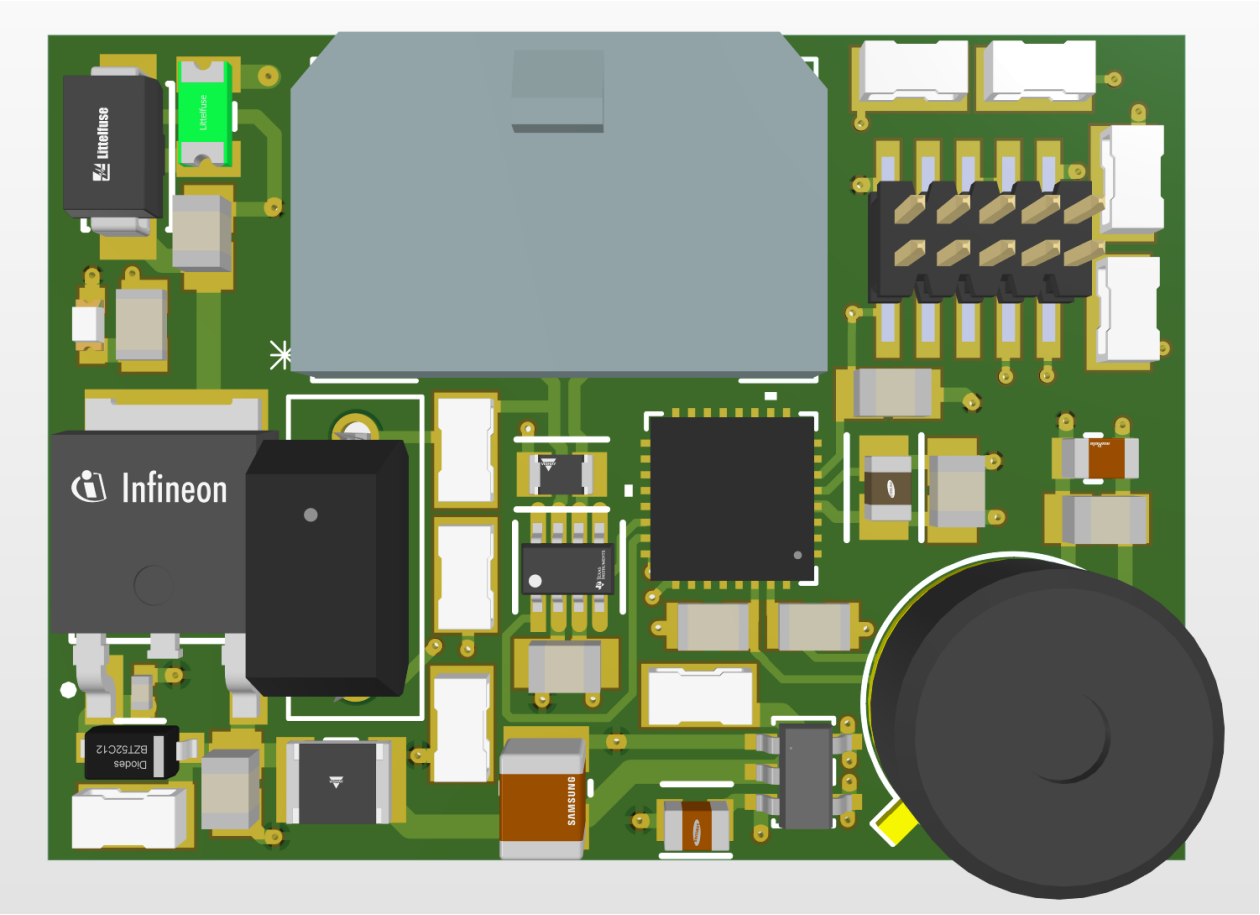

Bill of Materials

Item Details					Primary Solution				
Line #	Name	Description	Designator	Quantity	Manufacturer 1	Manufacturer Part Number 1	Supplier 1	Supplier Unit Price 1	Supplier Subtotal 1
1	08055C104K4Z4A		C1, C2, C6, C7, C8, C10	6	KYOCERA AVX	08055C104K4Z4A	DigiKey	0.101	1.01
2	CL32B106KBJNNNE	Cap Ceramic 10uF...	C3	1	Samsung Electro-...	CL32B106KBJNNNE	DigiKey	0.22	0.22
3	CL21B106KOQNNNE	CAP CER 10UF 16...	C4	1	Samsung Electro-...	CL21B106KOQNNNE	DigiKey	0.10	0.10
4	CL21A475KAQNNNE	CL21 Series 0805...	C5	1	Samsung Electro-...	CL21A475KAQNNNE	DigiKey	0.10	0.10
5	GRM21BC8YA106...	Chip Multilayer Ce...	C9	1	Murata	GRM21BC8YA106ME11L	DigiKey	0.28	0.28
6	SMAJ24CA	TVS DIODE 24V 3...	D1	1	Littelfuse	SMAJ24CA	DigiKey	0.28	0.28
7	BZT52C12-13-F	DIODE ZENER 12V...	D2	1	Diodes Inc.	BZT52C12-13-F	DigiKey	0.10	0.10
8	150060GS75000	430mcd Colorless...	D3	1	Wurth Elektronik	150060GS75000	DigiKey	0.15	0.15
9	0466.250NR	FUSE BOARD MN...	F1	1	Littelfuse	0466.250NR	DigiKey	1.01	1.01
10	436500400	Micro-Fit 3.0 Right...	J1	1	Molex	43650-0400	DigiKey	1.51	1.51
11	FTSH-105-01-L-DV	Connector Header...	J2	1	Samtec	FTSH-105-01-L-DV	DigiKey	1.36	1.36
12	IPD50P04P4L-11	OptiMOS - P2 Po...	Q1	1	Infineon	IPD90P04P405ATMA2	DigiKey	2.67	2.67
13	CRCW0402100KFK...		R1	1	Vishay	CRCW0402100KFKED	DigiKey	0.10	0.10
14	CRCW121047R0JN...	RES SMD 205K O...	R2	1	Vishay	CRCW121047R0JNEA	DigiKey	0.18	0.18
15	CRCW0805120RFK...	RES Thick Film, 12...	R3	1	Vishay	CRCW0805120RFKEAHP	DigiKey	0.18	0.18
16	CRCW08051K00FK...		R4, R5, R6	3	Vishay	CRCW08051K00FKEA	DigiKey	0.10	0.30
17	DS01-254-L-01BE	Dip Switch SPST 1...	SW1	1	Same Sky	DS01-254-L-01BE	DigiKey	0.42	0.42
18	RCS-0C	1206 PROBE PAD	TP1, TP2, TP3, TP4, TP5, TP6, TP7, TP8, TP9	9	TE Connectivity	1625854-1	DigiKey	0.266	2.66
19	NCP716BCSN330T...	No Description Av...	U1	1	onsemi	NCP716BCSN330T1G	DigiKey	0.77	0.77
20	MLX90640ESF-BA...	SENSOR DGTL -40...	U2	1	Melexis	MLX90640ESF-BAA-000-TU	DigiKey	36.28	36.28
21	STM32G0B1KEU6	Mainstream Arm...	U3	1	STMicroelectronics	STM32G0B1KEU6	DigiKey	4.52	4.52
22	TCAN332GDCNR	IC TRANSCEIVER 1...	U4	1	Texas Instruments	TCAN332GDCNR	DigiKey	2.83	2.83

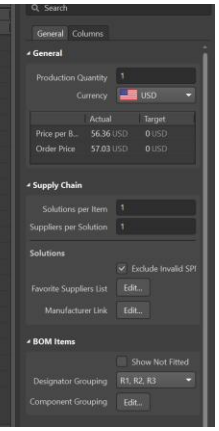

PCB Estimate:

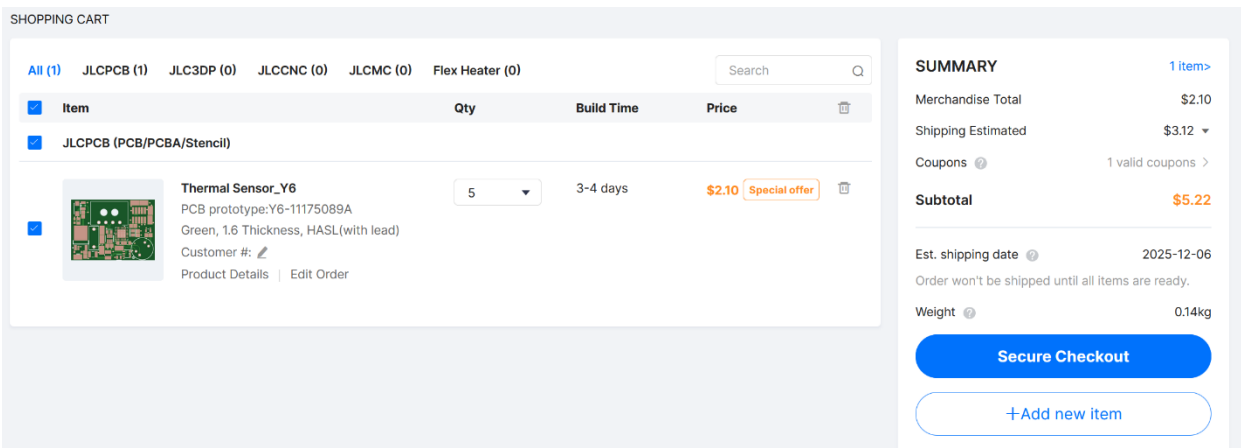

Total Cost of Components for one board = $56.36

5 PCBs = $5.22

Schematics

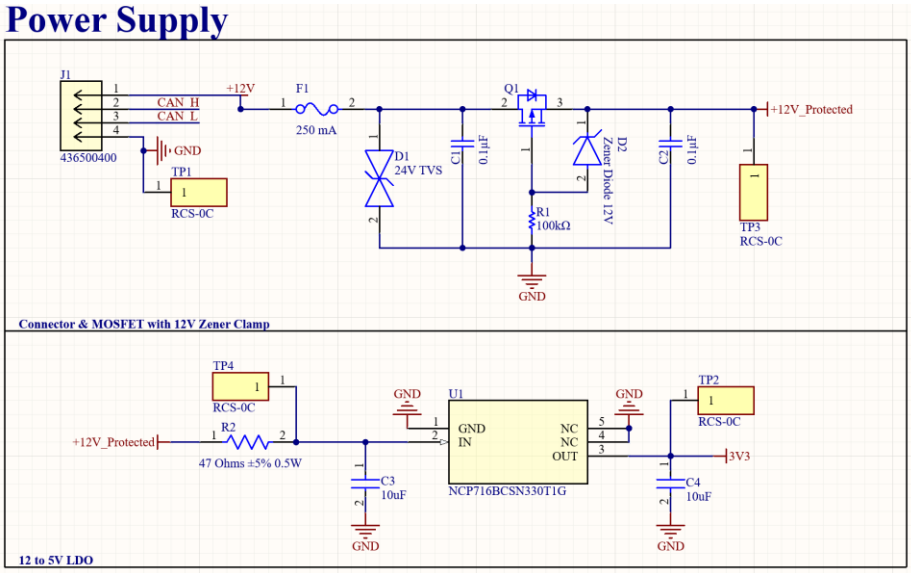
Power Supply
J1
436500400
CAN_H
CAN_L
GND
TP1
RCS-0C
+12V
F1
250 mA
D1
24V TVS
C1
0.1µF
Q1
R1
100kΩ
D2
Zener Diode 12V
C2
0.1µF
+12V_Protected
TP3
RCS-0C
Connector & MOSFET with 12V Zener Clamp
TP4
RCS-0C
+12V_Protected
R2
47 Ohms ±5% 0.5W
C3
10uF
U1
GND
IN
NC
NC
OUT
NCP716BCSN330T1G
TP2
RCS-0C
3V3
C4
10uF
12 to 5V LDO

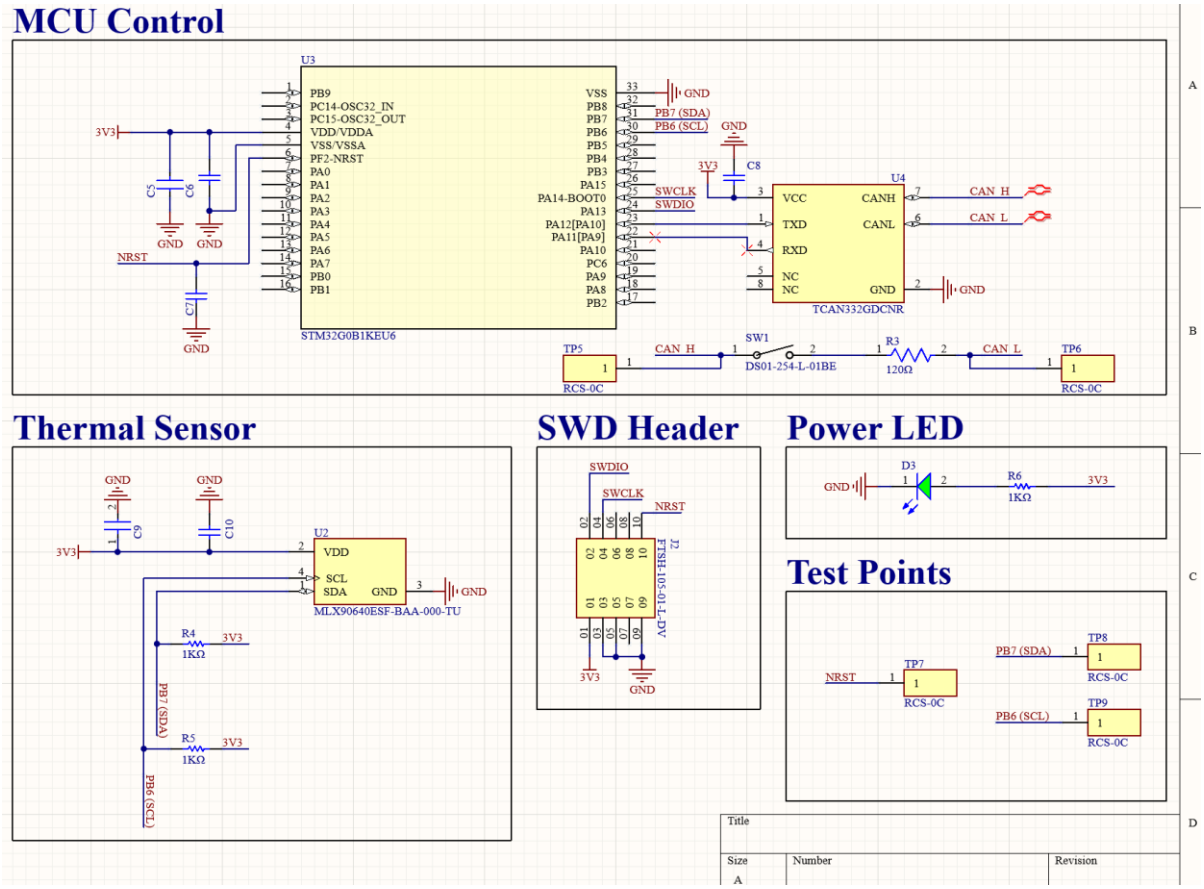
MCU Control
U3
PB9
PC14-OSC32_IN
PC15-OSC32_OUT
VDD/VDDA
VSS/VSSA
PF2-NRST
PA0
PA1
PA2
PA3
PA4
PA5
PA6
PA7
PB0
PB1
VSS
PB8
PB7
PB6
PB5
PB4
PB3
PA15
PA14-BOOT0
PA13
PA12[PA10]
PA11[PA9]
PA10
PC6
PA9
PA8
PB2
PB7 (SDA)
PB6 (SCL)
SWCLK
SWDIO
3V3
C5
C6
C7
C8
NRST
GND
STM32G0B1KEU6
U4
VCC
TXD
RXD
NC
NC
CANH
CANL
GND
TCAN332GDCNR
CAN_H
CAN_L
TP5
RCS-0C
SW1
DS01-254-L-01BE
R3
120Ω
TP6
RCS-0C
Thermal Sensor
C9
C10
U2
VDD
SCL
SDA
GND
MLX90640ESF-BAA-000-TU
R4
1KΩ
R5
1KΩ
PB7 (SDA)
PB6 (SCL)
SWD Header
SWDIO
SWCLK
NRST
J2
FTSH-105-01-L-DV
Power LED
D3
R6
1KΩ
Test Points
TP7
RCS-0C
TP8
RCS-0C
TP9
RCS-0C
Title
Size
A
Number
Revision

Layout (All 4 Layers)

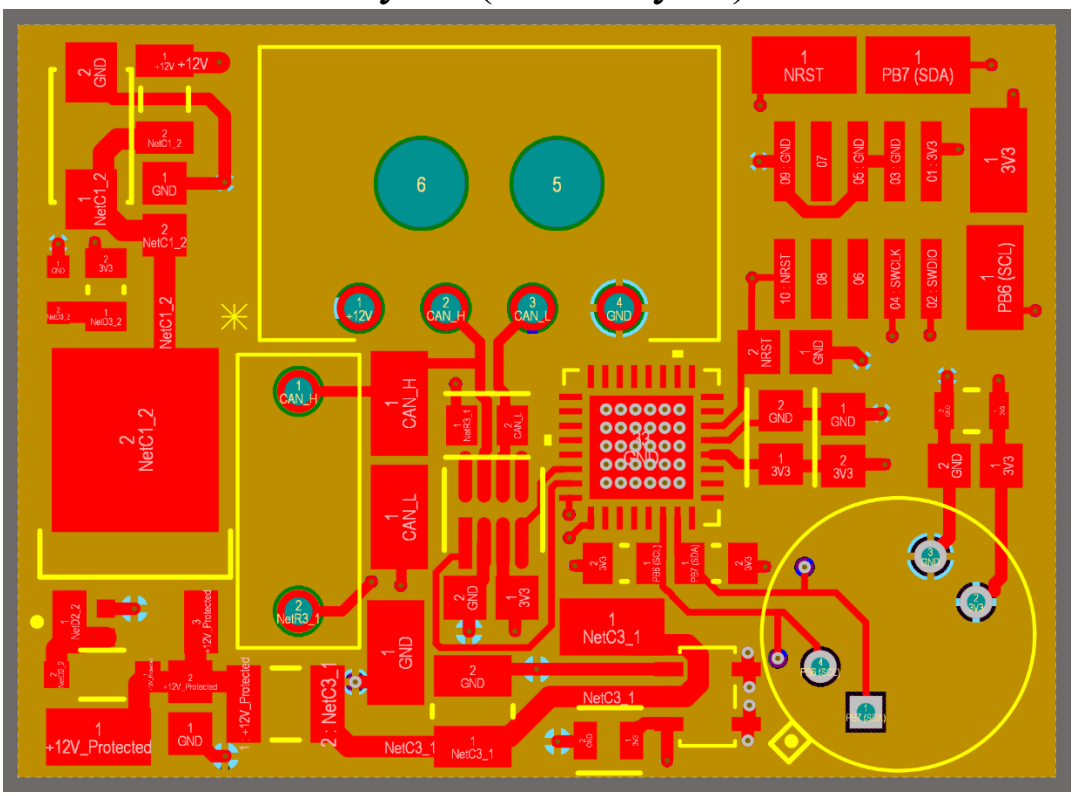

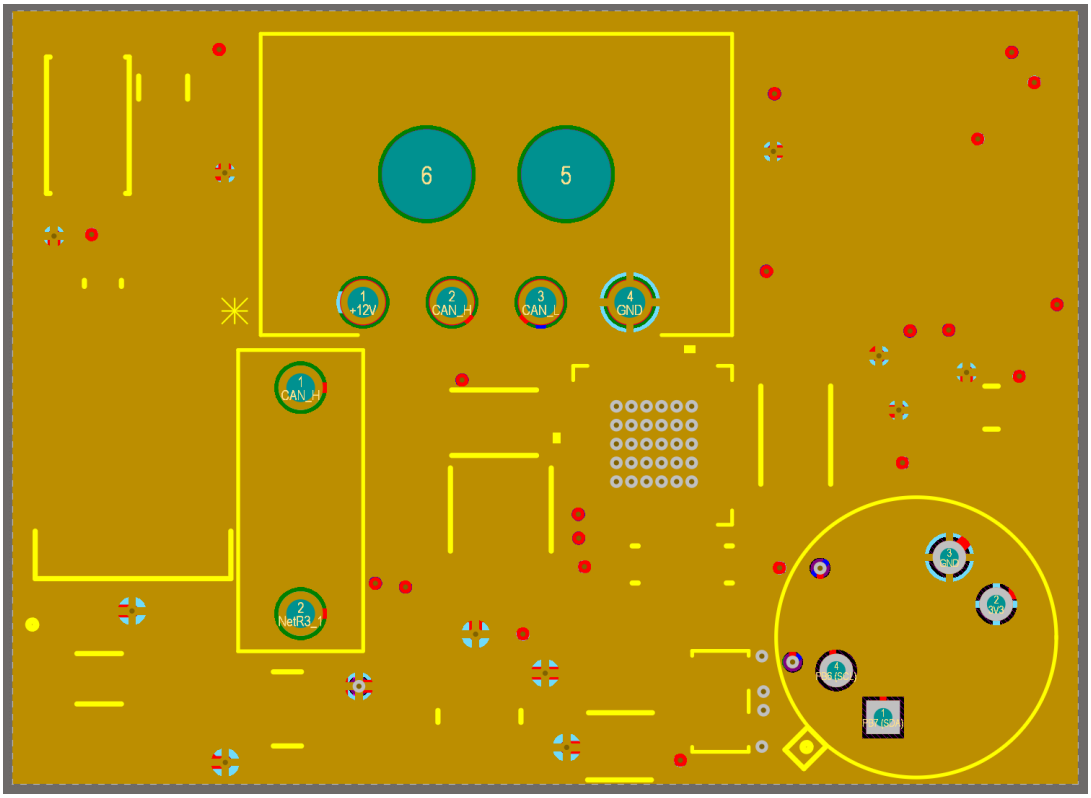

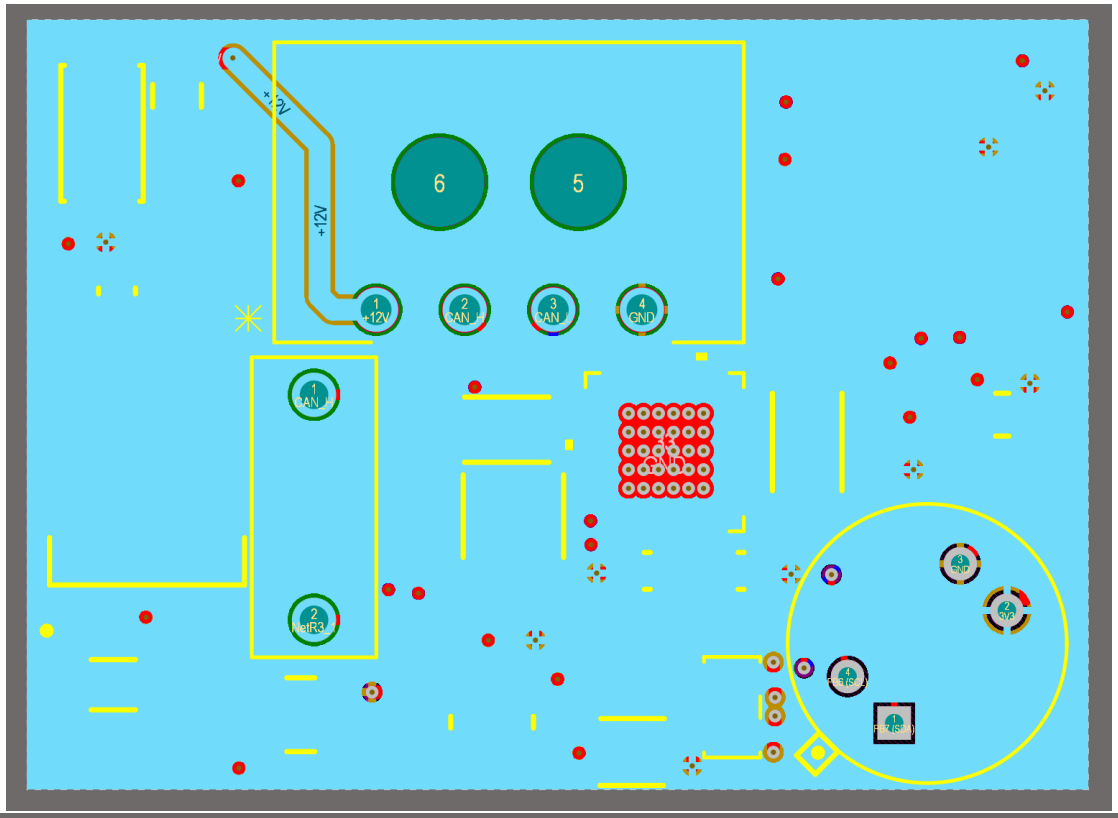
+12V
+12V
6
5
1 +12V
2 CAN_H
3 CAN_L
4 GND
1 CAN_H
2 NetR3_1
3V3
1 3V3
2 GND
3 GND
4 3V3
7 NRST

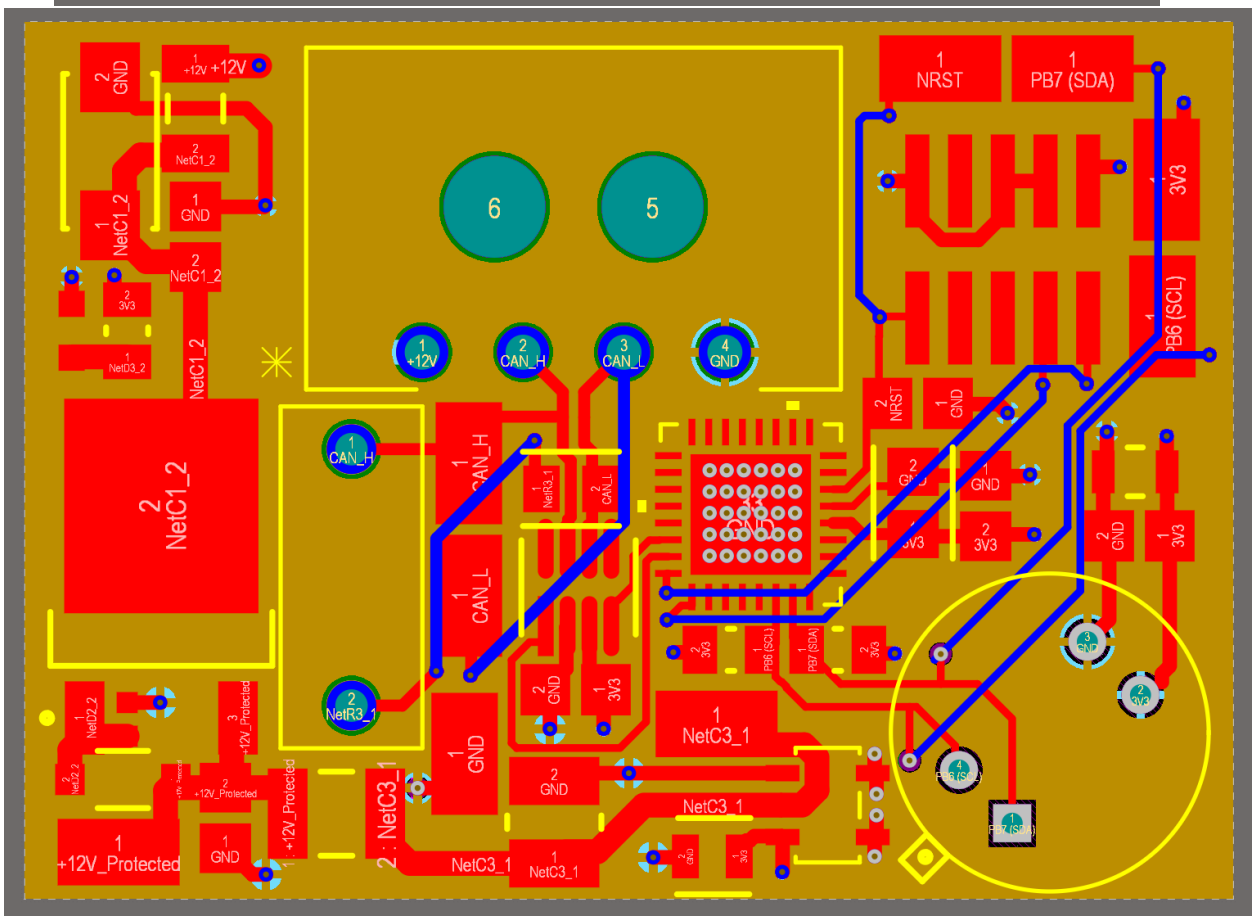
2 GND
1 +12V +12V
2 NetC1_2
1 GND
1 NetC1_2
2 NetC1_2
2 3V3
1 NetD3_2
2 NetC1_2
6
5
1 +12V
2 CAN_H
3 CAN_L
4 GND
1 NRST
1 PB7 (SDA)
1 3V3
1 PB6 (SCL)
2 NRST
1 GND
1 CAN_H
1 CAN_H
1 NetR3_1
2 CAN_L
1 CAN_L
2 NetC1_2
2 NetR3_1
2 GND
1 3V3
1 GND
2 GND
1 NetC3_1
NetC3_1
1 NetC3_1
2 3V3
1 PB6 (SCL)
1 PB7 (SDA)
2 3V3
2 GND
1 3V3
1 NetD2_2
2 NetD2_2
3 +12V_Protected
2 +12V_Protected
1 +12V_Protected
1 GND
+12V_Protected
2 : NetC3_1
NetC3_1
1 NetC3_1